Three-Phase Half Wave Rectifier

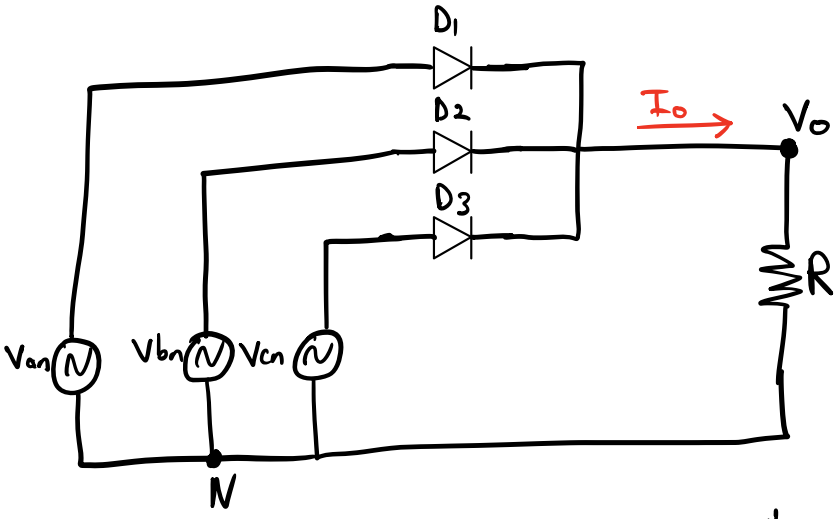

where $T = \pi/3$

$$\langle V_o \rangle = \frac{1}{T}\int_0^T V_i\sqrt{2}\cos(\theta)\,d\theta$$

$$\int_0^{\pi/3}\cos(\theta)\,d\theta = \sin(\theta)\Big|_0^{\pi/3} = \sin(\pi/3) - \cancel{\sin(0)}^{\,0}$$

$$\langle V_o \rangle = \frac{3}{\pi}\cdot V_i\sqrt{2}\cdot\frac{\sqrt{3}}{2} = V_i\,\frac{3\sqrt{2}}{2\pi}$$

Three-Phase Full Wave Rectifier

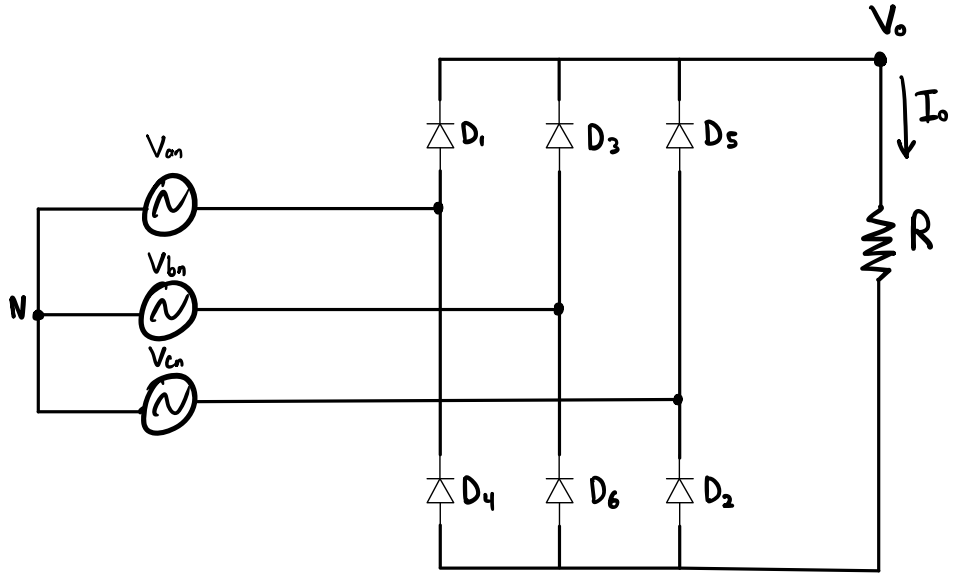

$$\langle V_o \rangle = 2 \cdot \langle V_{o(\text{Half Wave})} \rangle$$